液体媒質におけるフェムト秒パルス誘起フィラメントの伝搬特性改善

Improving the propagation properties of fs filamentaiton in liquids

秦　瑀 [1)]　　板倉　隆二 [2)]　　中嶋　隆 [1)]
YU QIN　　RYUJI ITAKURA　　TAKASHI NAKAJIMA

[1)] 京都大学　　[2)] 原子力機構

（概要）To study the propagation of femtosecond pulses with different beam modes in liquid, three different beams (Gaussian beams with different diameters and the combination of these two beams)are focused into the dye solution. For each mode, the photos of fluorescence along the propagation are taken at different pulse energy. The spectrum and intensity of the conical emission (CE) are measured as well by blocking the laser wavelength and taking the spectrum and beam profile measurement.

For each beam mode, the peak of fluorescence moves towards the entrance when pulse energy increases, which suggests the self-focusing occurs. At the same time, the CE intensity is also increased, and the spectrum of CE becomes broader.

Among the three beams, the Gaussian beam with smaller diameter has the lowest threshold for self-focusing, and for the same pulse energy, it induces longer fluorescence channel and stronger CE.

キーワード：femtosecond pulse; propagation; liquid; different beam modes; filament

１．目的

Femtosecond filamentation is one of the common nonlinear phenomena when an intense short laser pulse propagates in a nonlinear medium. The medium can be either gas or liquids. The aim of this work is to improve the filamentation properties by modifying the transverse property of the fs beam.

２．方法

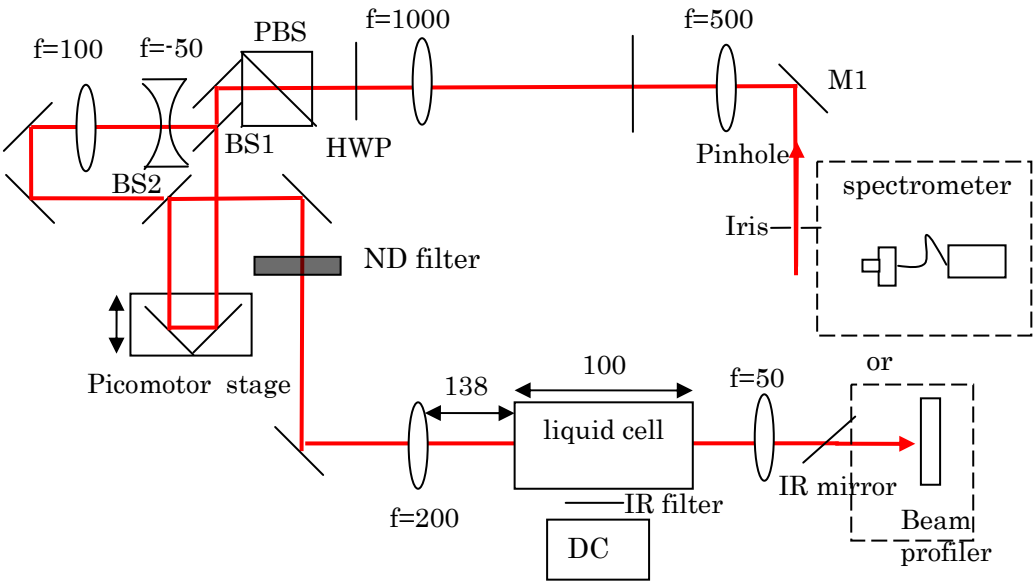

Fig.1. the experiment setup. M, BS, PBS, and HWP refer to mirror, beam splitter, polarizing beam splitter, and half wave plate respectively. All the lengths in the figure have the unit mm.

The experiment setup is shown in Fig.1. To generate the combined beam, a Michelson interferometer with a telescope in one arm is used. Beams from each arm and the combination beam are then focused by a f=200 mm lens to the liquid cell to study the filament for different modes. The beam diameters of three beams are 2 mm (small beam), 4 mm (big beam), and 2.5 mm

(combination beam) at $1/e^2$.

To monitor the on-axis laser intensity, we used a dye solution (0.13% g/g, coumarin in methanol) as the medium, and the photo of three photon fluorescence is taken by a camera. Since CE is also an important phenomenon which indicates the on-axis intensity, the CE power and spectrum are also measured after filtering out the laser wavelength. For each beam mode, above measurement is done when the pulse energy is changed from 0 to 4.5 μJ.

３．結果及び考察

To know the on-axis laser intensity, the photos of fluorescence emission are changed into matrix. After subtracting the background, the maximum values are picked along the propagation direction as the fluorescence intensity. For each beam, the on-axis fluorescence intensities at different pulse energy are shown in Fig. 2. The beam modes and pulse energy are in the legend.

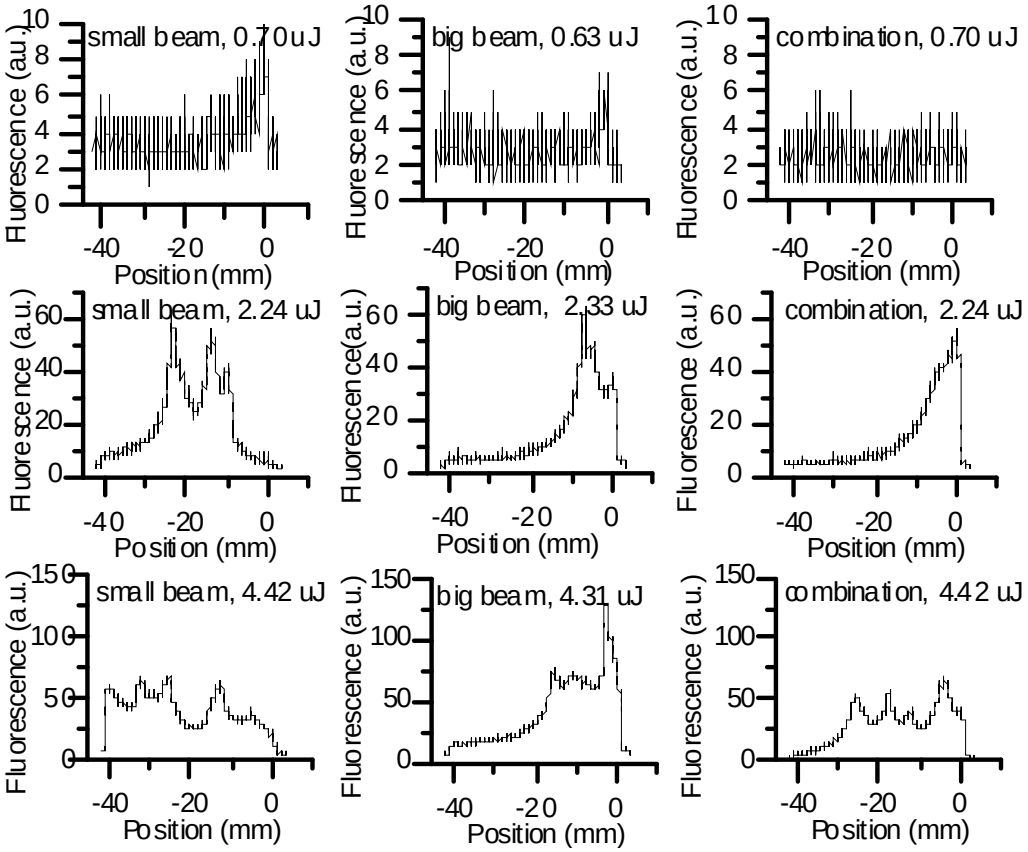

Fig. 2. The on-axis fluorescence intensity at different energy for three beam modes: left column, for small Gaussian beam; middle, for big Gaussian beam; and right column for the combination beam.

From Fig. 2, we can see that for each mode, the position where fluorescence begins to appear moves towards the entrance when pulse energy increases. Compared with other two modes, it is obvious that the small beam has the best ability to generate the fluorescence channel when focused into liquid. The self-focusing appears at lower energy, and at the same energy, it generate longer fluorescence channel (more than 4 cm, at 4.42 μJ). This indicates that it can keep high on-axis intensity for longer distance during the propagation. For the other two beams, the difference is not easy to compare.

Fig. 3 shows the CE spectra at different energy for three beam modes. Because the spectrometer we use, we did not observe the spectrum below 526 nm. From Fig. 3, we find the CE spectrum covers at least from 526 nm to 950 nm. The spectral width and intensity increas with the pulse energy. Since an Ti: Sapphire mirror (CVI_TLMB-45-1025) is used to remove the laser wavelength, and we only know the transmition of it at 730-870 nm, we can not say the NIR CE is weaker than the VIS CE, and appears only at higher energy. From the spectra, we can find CE intensity is much higher when the small beam is used, which also indicates the longer focal depth.

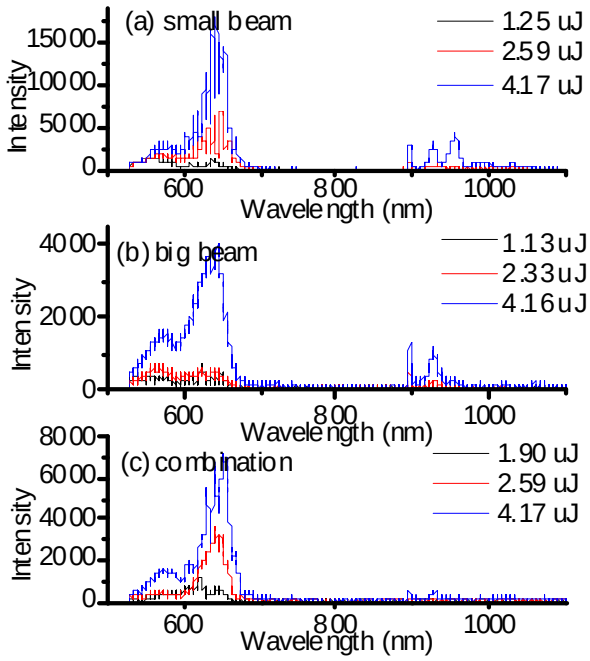

Fig.3. The CE spectra at different pulse energy for (a) the small beam, (b) the big beam, and (c) the combination.

The CE power is measured by a CCD detector (Thorlabs, BC 106-VIS). Fig. 4 shows the CE power as a function of pulse energy for all three beams. When the pulse energy is between 1 to 2 μJ, the CE generated by small beam is much stronger compared to other two modes.

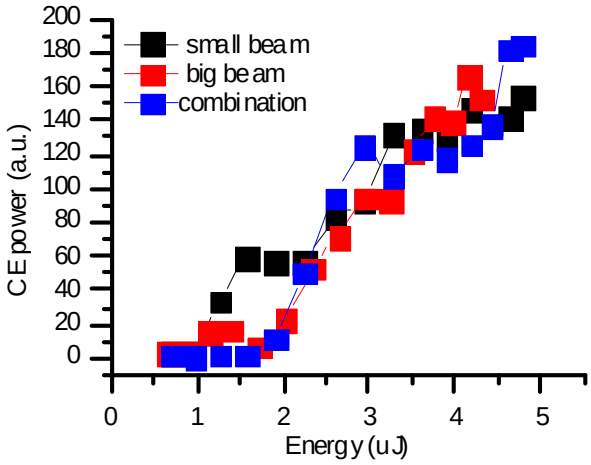

Fig. 4. CE power as a function of pulse energy for three beams.

In this experiment, we have measured on-axis fluorescence intensity, CE spectra, and the CE power when three different beams are focused into a dye solution. Our result shows that compared with other two beam modes, the small Gaussian beam can generate longer fluorescence channel, and induce stronger CE.